Compressed Air Dryer

Operating Manual

Freezing Compressed Air Dryer

Http://www.dryer.com.tw/
E-mail:dryer@dryer.com.tw

1. Features
1. Introduction 2
2. Features of Product 3
2. Names of Exterior Parts And Functions
1. Names of Exterior Parts 3
2. Operating Panel 4
3. Points of Installation for Attention
1. Space for Installation 4
2. Places Avoided for Installation 5
4. Method of Installation (Piping)
1. Diameters of Inlet And Outlet Pipes of Dryer 5
2. Piping Method 6
5. Method of Installation (Power Distribution)
1. Electric Features of Dryer 6
2. Distribution Lines 7
6. Method of Operation
1. Inspection Items Before Operation 7
2. Operation 8
3. Temperature Range of Dew Point 8
4. Stop 9
7. Daily Maintenance
8. Protection Device And Troubleshooting
1. Protection Device 10
2. Troubleshooting 12
9. Appendix 1: Drawing of Purification Equipment Application
1. Drawing of Electric Wires 13

Introduction

This manual mainly provides the instructions of operating this equipment and general maintenance tasks for the users. The purpose of this manual is to extend the operation life of this equipment and prevent failures so as to ensure the drying quality of the compressed air dryer.

This manual provides information related to drying equipment for reference. Ensure to read it carefully before installing or using this air dryer and comply with instructions of installation, operation and maintenance to prevent danger or damage to the equipment.

Ensure to comply with instructions on installation, operation and maintenance to prevent danger or damage to the equipment.

Notice Ensure to follow the following regulations to avoid danger:

1. Keep the compressed air pressure under the allowable pressure of the dryer.
2. Ensure no pressure inside the system before disassembling or installing the pipes for maintenance.
3. The requirements for the operating power have to meet.
4. Cut off the power prior to replacing electric parts to prevent electrifying.

Features of Product

The major function of the freezing compressed air dryer is to remove moisture content in compressed air by reducing the temperature of compressed air to 2℃ so that vapor in compressed air will be precipitated to water, which will be drained out of the compressed air system by the automatic water drainer. Water content of compressed air after drying is extremely little under normal circumstances. Generally speaking, water removal rate can be up to 93%.

Names of Exterior Parts And Functions

Names of Exterior Parts

Air Outlet:
Compressed air after drying flows out from here.

Air Inlet:
Wet compressed air enters from here.

Control Panel:
This panel is used for control, operation and status display.

Automatic Water Drainer (rear):
Precipitated moisture of the dryer is removed from here.

Power Distribution Control Cabinet:
It is the place where electric elements and power are installed and controlled.

Power Cable Hole:
There is one round hole at the bottom of the power distribution control cabinet for the power cable to go through.

Operating Panel

Outlet Pressure (SD-015 above models):
Outlet air pressure after being processed by the dryer is displayed.

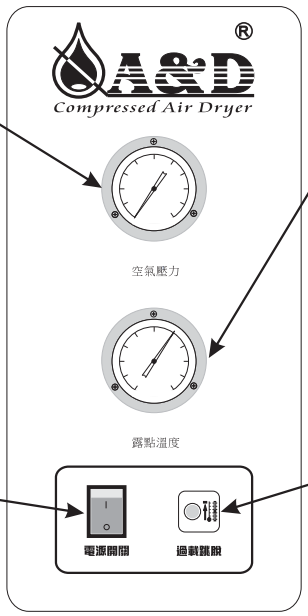

Dew Point Temperature:
The cooling temperature of compressed air is displayed.

Power Switch:
Operation or stop of this dryer is controlled by this switch.

Overload Trip:
When the dryer fails or operates abnormally, the red indicator will be on.

Points of Installation for Attention

Space for Installation

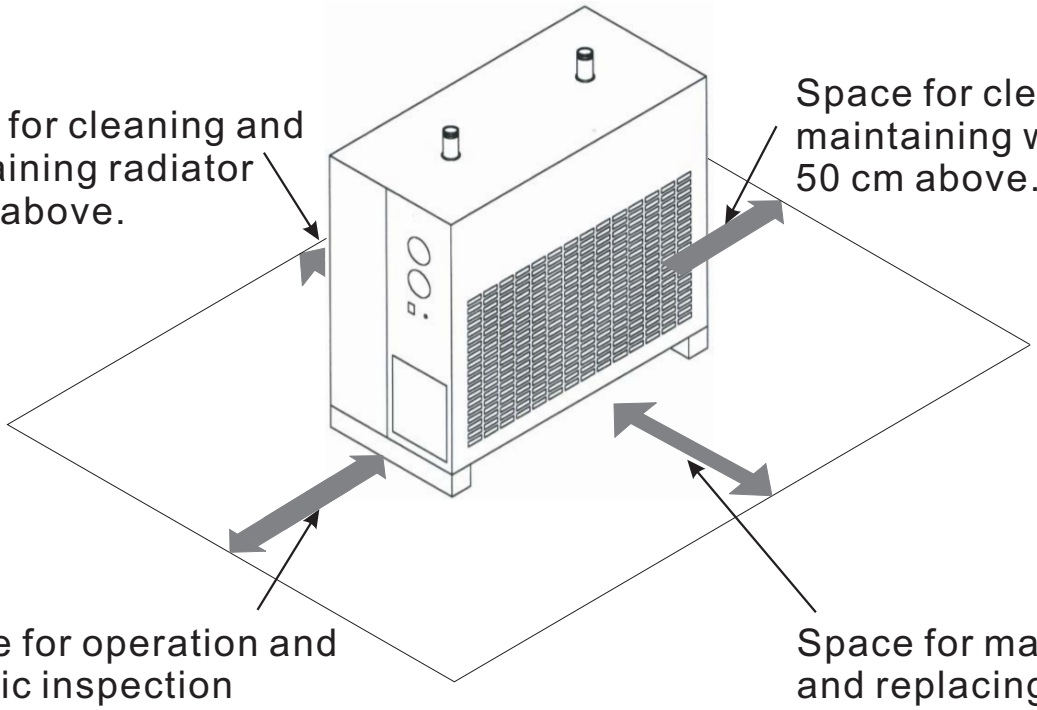

Places Avoided for Installation

Do not install on uneven grounds or places where shake violently.

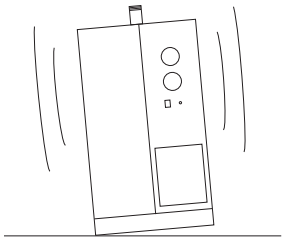

Do not install at places exposed to the rain.

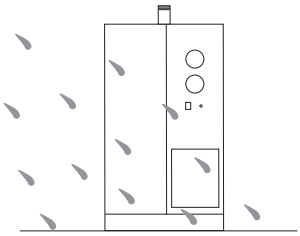

Do not install at places with bad ventilation.

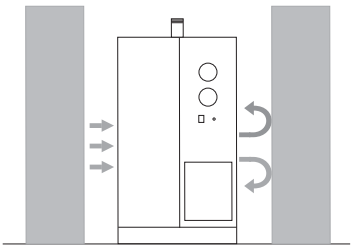

Do not install at places with direct sunlight or close to heat sources.

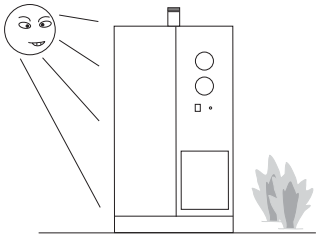

Do not install at places that exceed rated ambient temperature.

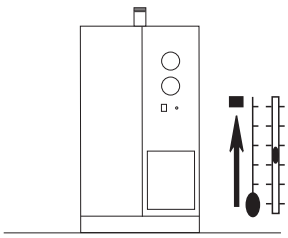

Do not install at places that are dusty or with corrosive air.

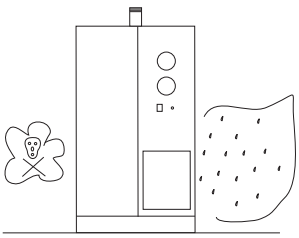

Method of Installation (Piping)

Diameters of Inlet And Outlet Pipes of Dryer

MODE	SD-005	SD-010	SD-015	SD-020	SD-030	SD-040	SD-050	SD-060
INCH PT	1/2"	3/4"	1"		1-1/2"		2"	

MODE	SD-075S	SD-100S	SD-150S	SD-200S	SD-250S	SD-300S	SD-400S
INCH PT	2"		2-1/2"	3"	3"	4"FL	

Piping Method

1. Please refer to the attached drawing 1 for installation procedures when there is purifying equipment like gas tank and filter, etc.
2. Diameter of the air inlet and outlet of the dryer is the same. Pay attention to wrong installation that may reduce the drying efficiency of the dryer.
3. If the compressor shakes violently while running, install an extra high-pressure vibration-proof hose unto the connection pipe between the compressor and the dryer to protect the dryer.
4. Install valve gates and bypass pipes at the inlet and outlet of the dryer for service and maintenance needs.
5. Diameters of the pipes should not be too small. Avoid long pipes with many curves to reduce the loss from pressure drop.
6. Keep dust or unnecessary objects away from the air pipes while installing.

Method of Installation (Power Distribution)

Electric Features of Dryer

Model	SD-005	SD-010	SD-005	SD-010	SD-015	SD-020	SD-030	SD-040	SD-050	SD-060
Running Ampere	4.5 A	5.5A	2.3 A	2.8 A	3.2 A	3.6 A	5.5 A	7.0 A	8.5 A	11.0 A
Power Supply	1ϕ 110 V / 60 Hz		1ϕ 220 V / 50~60 Hz							
Diameter of Power Cable	1.25mm^2 above						2.0mm^2 above		3.5mm^2 above	
Capacity	2P/10 A						2P/15 A		2P/20 A	

Model	SD-075S	SD-100S	SD-150S	SD-200S	SD-250S	SD-300S	SD-400S
Running Ampere	7.8A	11A	15A	20A	23A	29A	34A
Power Supply	3ϕ 220 V / $^{60}/_{50}$ Hz						
Diameter of Power Cable	3.5mm^2 above		5.5mm^2 above		14mm^2 above		
Capacity	3P/20 A		3P/30 A		3P/75 A		

Distribution Lines

1. Select materials like lead wires with proper diameters and capacity in accordance with the above table.
2. Power cable should go through the round hole at the bottom of the electric control cabinet. Use proper tools to connect it to the terminal of the lead wire and fasten it tightly at one side of the terminal.
3. Check power supply and voltage to be connected to make sure it is within the range of ±5% of rated voltage (see the nameplate).
4. Do not share the same protection switch with other equipment.
5. Install an extra proper protection switch from electric leakage in accordance with the aforementioned electric properties.
6. Ensure to connect to the grounding wire properly.

Inspection Items Before Operation

1. Inspect the voltage of power supply.
2. Inspect the environment temperature (not over 40℃).
3. Check if the condenser and the fin of the pre-cooler are clean.

Operation

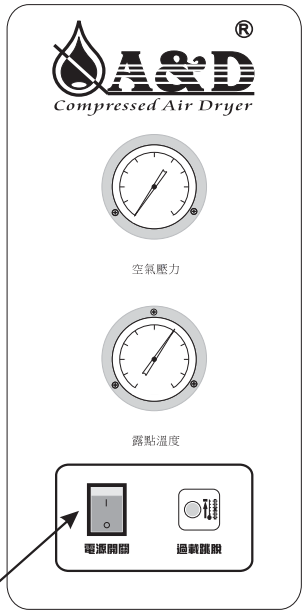

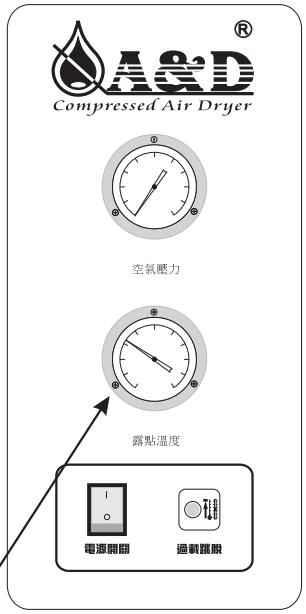

1. When the power switch is on "I", the dryer starts to run.
2. Observe if the reading on the dew point thermometer decreases gradually after the dryer starts to run. If it does, it means the freezing system is normal.
3. Check if operation of the cooling fan motor is normal.
4. After the dryer runs for 3 minutes, open the valve gates of air inlet and outlet and check if the bypass pipes are tightened.
5. Check if the valve gate of the automatic water drainer is open.
6. Check if air pressure is within the rated range and any leakage of the air pipes.

The valve gate of the air inlet can't be opened until the dryer runs for some time because it takes time for the dryer to establish sufficient cooling temperature and the compressed air going through the dryer at this moment can't have excellent drying effect.

Temperature Range of Dew Point

According to ISO 8573.1, dew point temperature of a freezing dryer is based on 2 - 10℃, as the blue area between two dotted lines shown in the figure on the right.

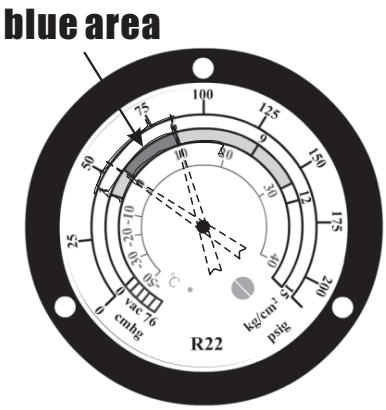

Special Situation

When the dryer starts to run without any load or at a lower environment temperature, the dew point temperature of the freezing dryer might not be within the blue area (at a lower position). The cooling fan may stop shortly and will begin to run after the temperature rises within the range of the blue area, which is normal to prevent from icing and freezing.

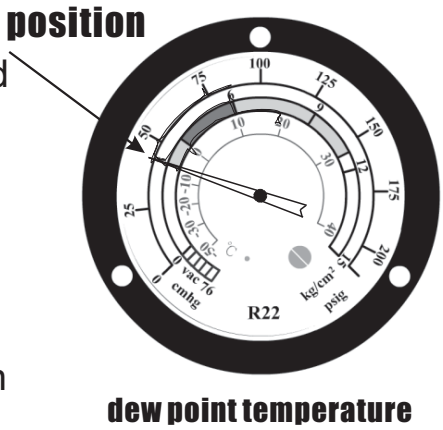

Stop

1. Close the valve gates of air inlet and outlet and check if the bypass pipes are tightened.
2. When the power switch is placed on "O", the dryer stops to run.

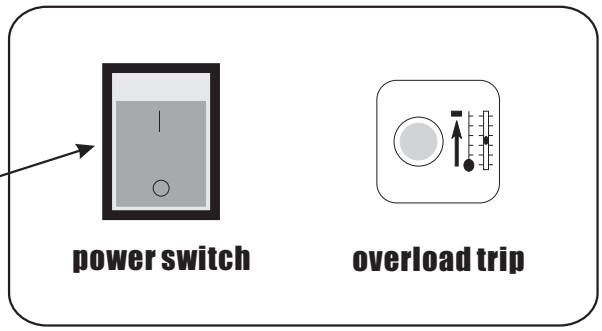

Shut off the valve gates of air inlet and outlet before stopping the dryer so that compressed air may continue flowing through the dryer and get the expected drying effect after the dryer stops.

Do not turn on and off the power switch consecutively to prevent damage to the refrigerant compressor.

Daily Maintenance

1. Check the automatic water drainer (Fig. 1) every day for any blocking or leakage. When obstruction is spotted, remove the water drainer right away by disassembling parts like the internal filter net, the ballcock and the acrylic cup, etc. Use soap water or neutral detergent to clean. Erosive solvents like petroleum, toluene and rosin, etc. are forbidden.
2. Check if the condenser and the fin of the pre-cooler are clean to ensure best heat release for the dryer.
3. Use an air spray gun and a brush (Fig. 2) to clean the condenser and the fin of the pre-cooler. Pay attention not to deform the fin.

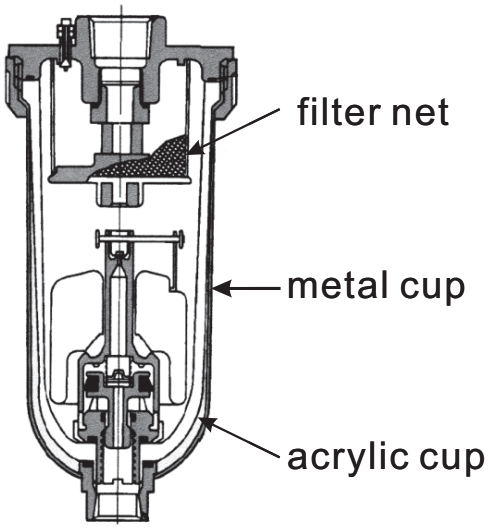

Fig. 1

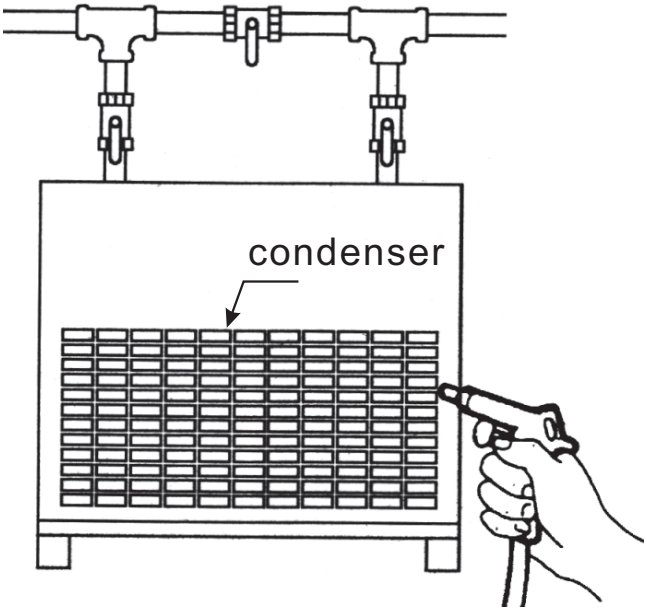

Fig. 2

The major function of the automatic water drainer is to remove cooled and precipitated moisture out of the air system. Blocking of the dryer will lose such function.

To stabilize the drying effect and avoid tripping or failures, ensure to keep the condenser and the fin of the pre-cooler clean.

Protection Device And Troubleshooting

Protection Device

1. Protection Device for control substrate ☞ Fuse (250V/3A)
   When over-high voltage is input or the part on the substrate breaks down, this fuse will be melted to prevent elements at rear like the compressor from being damaged.
2. Protection Device for Fan Motor ☞ Fuse (250V/3A)
   When the cooling fan motor breaks down to cause excessive current, this fuse will be melted to avoid electric hazards.
3. Protection Device for Freezing System ☞ Temperature Sensor
   When the freezing system is lack of maintenance or the refrigerant leaks, backflow temperature will become too high and cause the compressor to overheat. Thus, the compressor can be stopped opportunely by the temperature sensor.
4. Protection Device for Compressor ☞ Current Sensor
   The current sensor can detect operation status of the compressor when the dryer is running. In case of over-current, the compressor will be stopped at once.

Troubleshooting

1. Can't start

Failure	Possible Reason	Resolution
No display	Power switch trips or breaks down.	Check power switch and make sure if voltage is normal.
	Abnormal power supply causes the fuse of the control substrate to melt.	Supply power of ±5% of rated voltage in accordance with the nameplate and replace the fuse.
	Control substrate breaks down.	Replace a new one.
Overload trip indicator on	Condenser is blocked.	Remove dust or impurities out of the surface of the fin in compliance with service instructions.
	Cooling fan breaks down to cause the fuse of the fan to melt.	Replace a fan motor and a fuse.
	Refrigerant leaks.	Vacuum after repair and re-fill refrigerant.
	Rated environment temperature exceeds.	When ambient temperature is over 40℃, relocate the equipment or add ventilation facilities.

1. Can't start

Failure	Possible Reason	Resolution
Overload trip indicator on	Rated air flow exceeds.	Increase dryer equipment.
	Compressor malfunctions.	Replace a new compressor.
	Refrigerant system is blocked.	Replace the dryer and capillary. Vacuum and re-fill refrigerant.
	Abnormal power supply	Supply power of ±5% of rated voltage in accordance with the nameplate.

2. Normal operation but bad dewatering effect

Failure	Possible Reason	Resolution
Abnormal water draining system	Filter net is blocked.	Clean or replace in accordance with service instructions.
	Control valve not open.	Open the control valve for water draining.
	Dryer is placed unevenly.	Reinstall the dryer on even grounds.
Improper operation or pipe design	Bypass pipes not closed completely	Close tight valve gates of bypass pipes.
	Compressed air does not go through the dryer.	Check the installed pipes.
	Wrong installation of air inlet and outlet	Reinstall the pipes of air inlet and outlet.
Rated requirements not met	Rated air flow exceeds.	Increase dryer equipment.
	Rated environment temperature exceeds.	When ambient temperature is over 40℃, relocate the equipment or add ventilation facilities.

3. Extreme pressure drop

Failure	Possible Reason	Resolution
Improper operation	Valve gates of inlet and outlet not open completely	Open valve gate.
	Filter in the pipe is blocked.	Replace the filter element.
Rated requirements not met	Rated air flow exceeds.	Increase dryer equipment.
Bad design of air pipes	Diameter of air pipes too small	Increase the diameter and re-pipe.
	Joint where air pipes connect leaks.	Reinstall at places where leak occurs.

4. After-sale service

When the dryer malfunctions, comply with the failure, possible reason and resolution in the above table. Do not conduct maintenance or repair if the cause of the problem is not confirmed. Contact the manufacturer from whom the dryer was purchased and inform them the following items:

Notification Items for Dryer Failure	Part To Be Purchased for Replacement
1. Model number and manufacturing number of the product 2. Symptoms and possible reasons of failure 3. Address, phone number and contact person	1. Model number and manufacturing number of the product 2. Name and quantity of the required part 3. Address, phone number and contact person

Appendix 1: Drawing of Purification Equipment Application

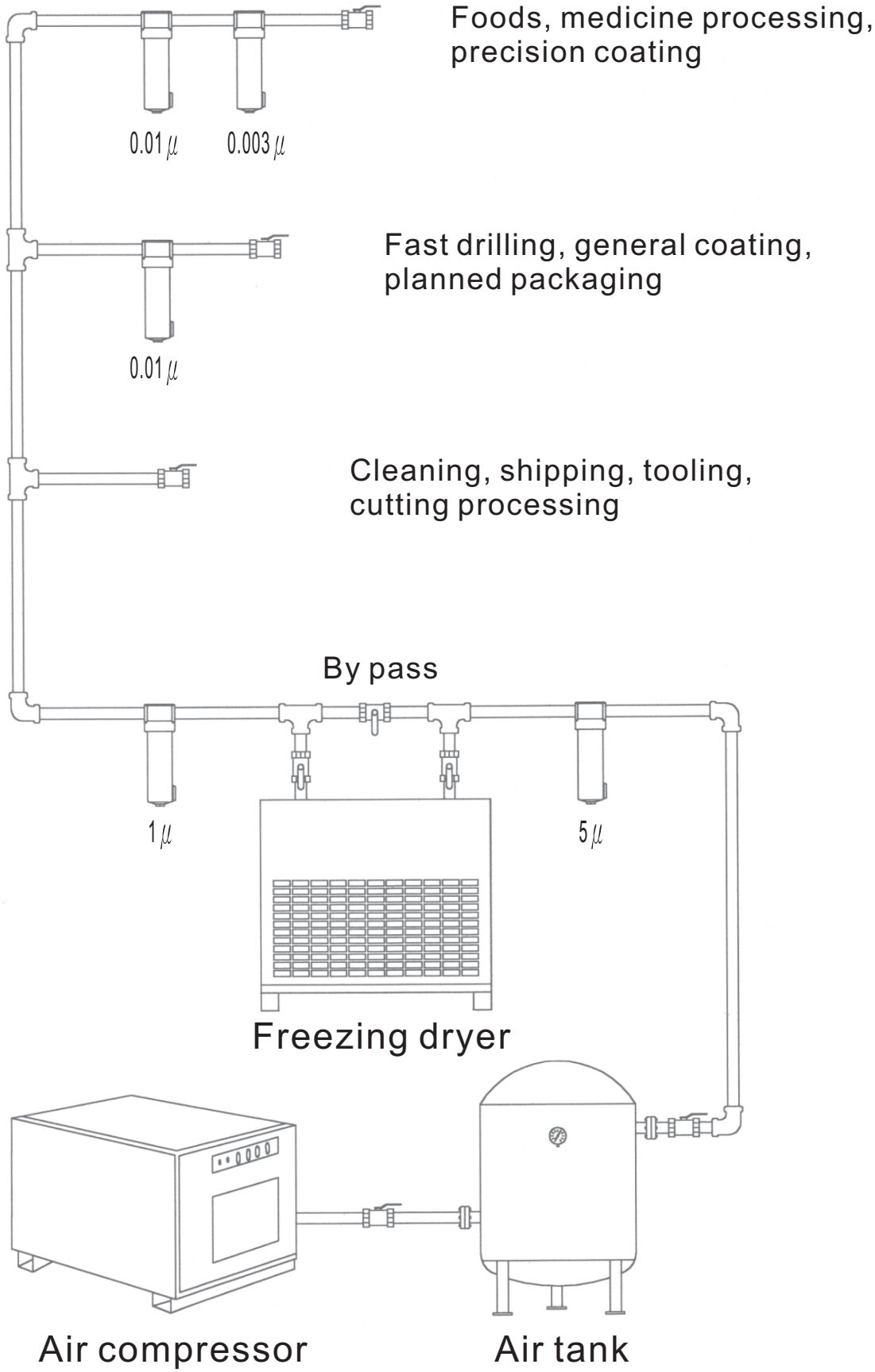

Drawing of Electric Wires

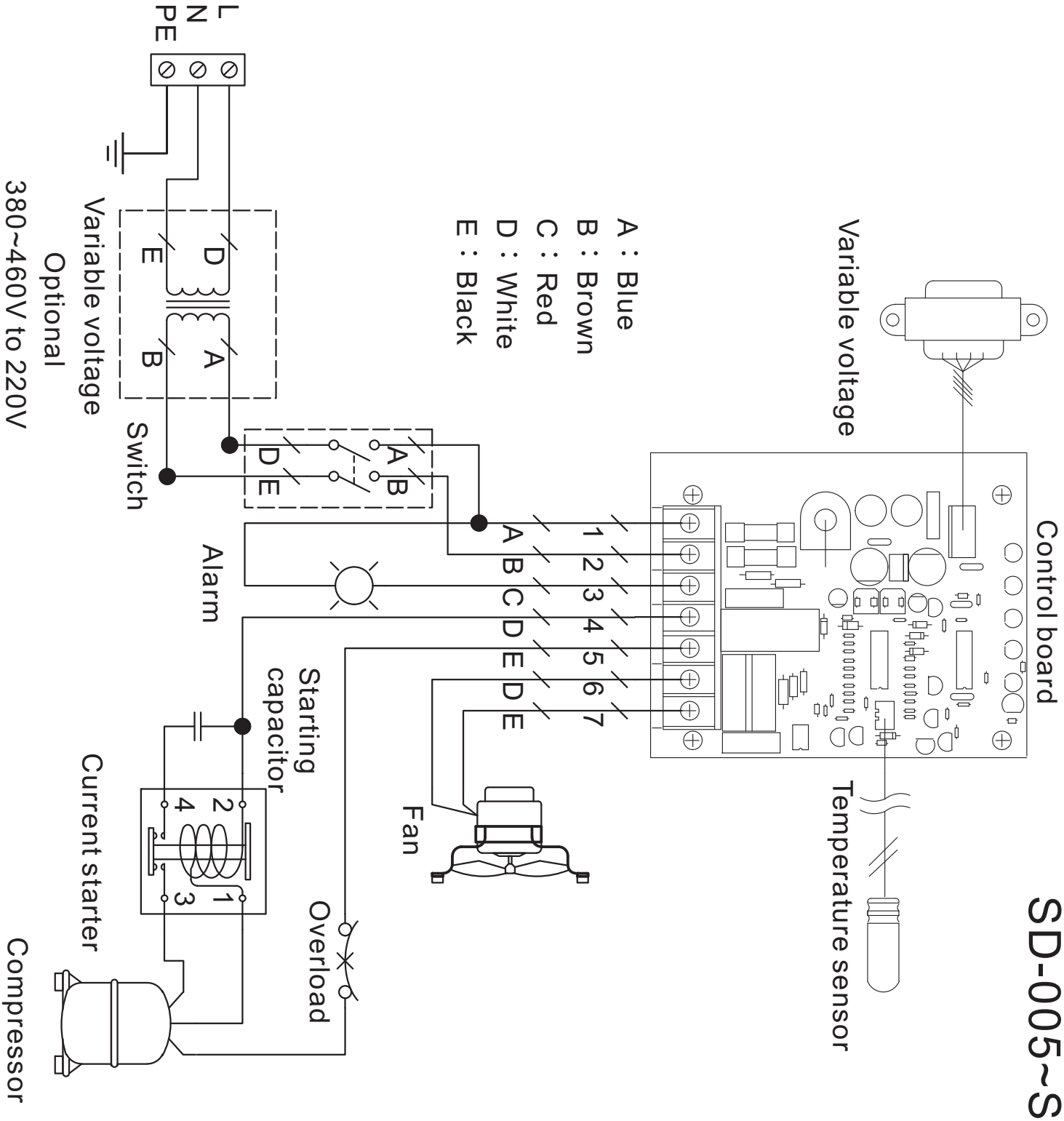

SD-030~SD-060

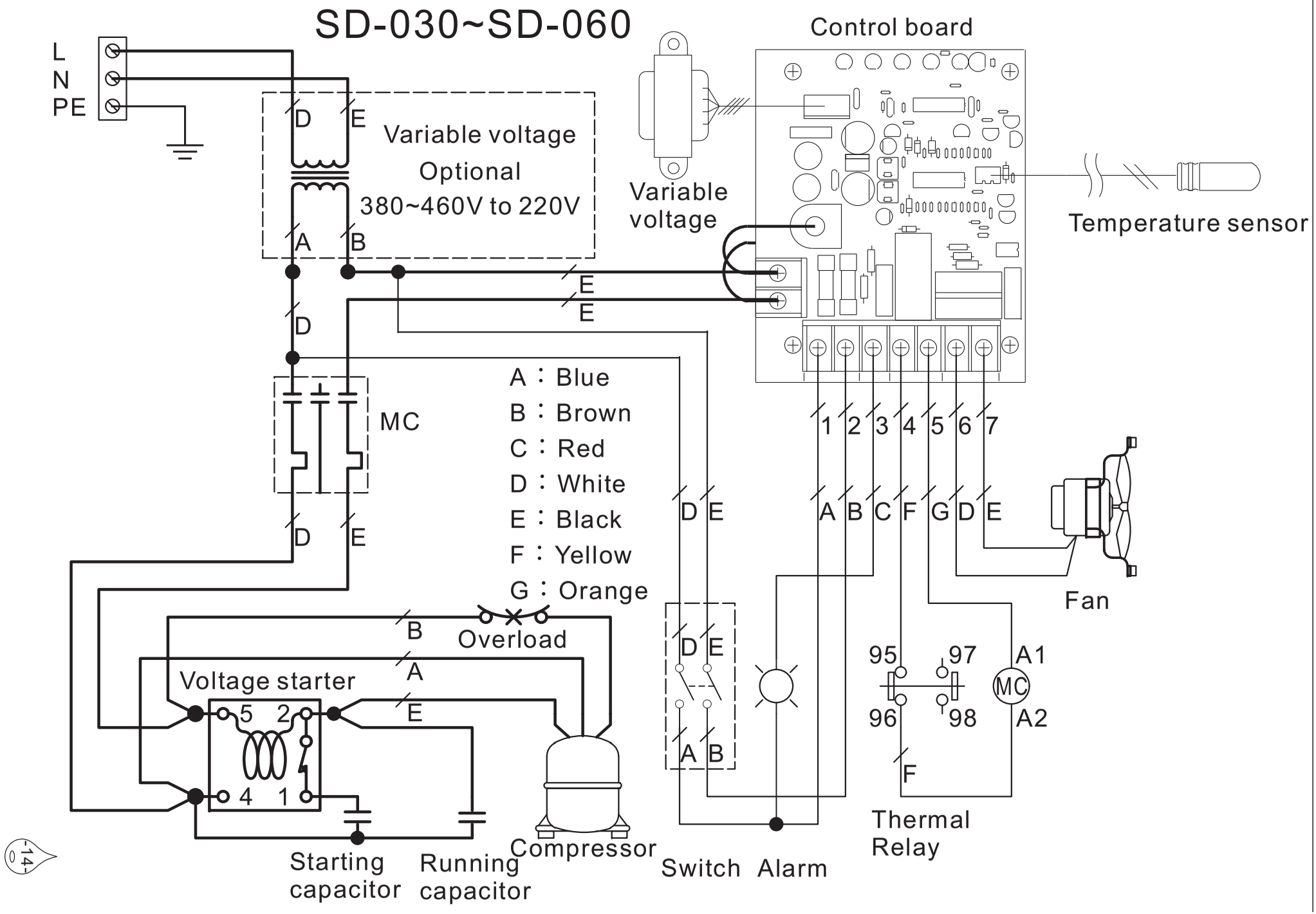
L
N
PE
D
E
Variable voltage
Optional
380~460V to 220V
A
B
Variable
voltage
Control board
Temperature sensor
E
E
D
MC
A：Blue
B：Brown
C：Red
D：White
E：Black
F：Yellow
G：Orange
1 2 3 4 5 6 7
A B C F G D E
D E
Fan
B
Overload
A
Voltage starter
5 2
E
4 1
D E
A B
95 97 A1
96 98 A2
MC
F
Thermal
Relay
Starting
capacitor
Running
capacitor
Compressor
Switch
Alarm

SD-075S~SD-400S

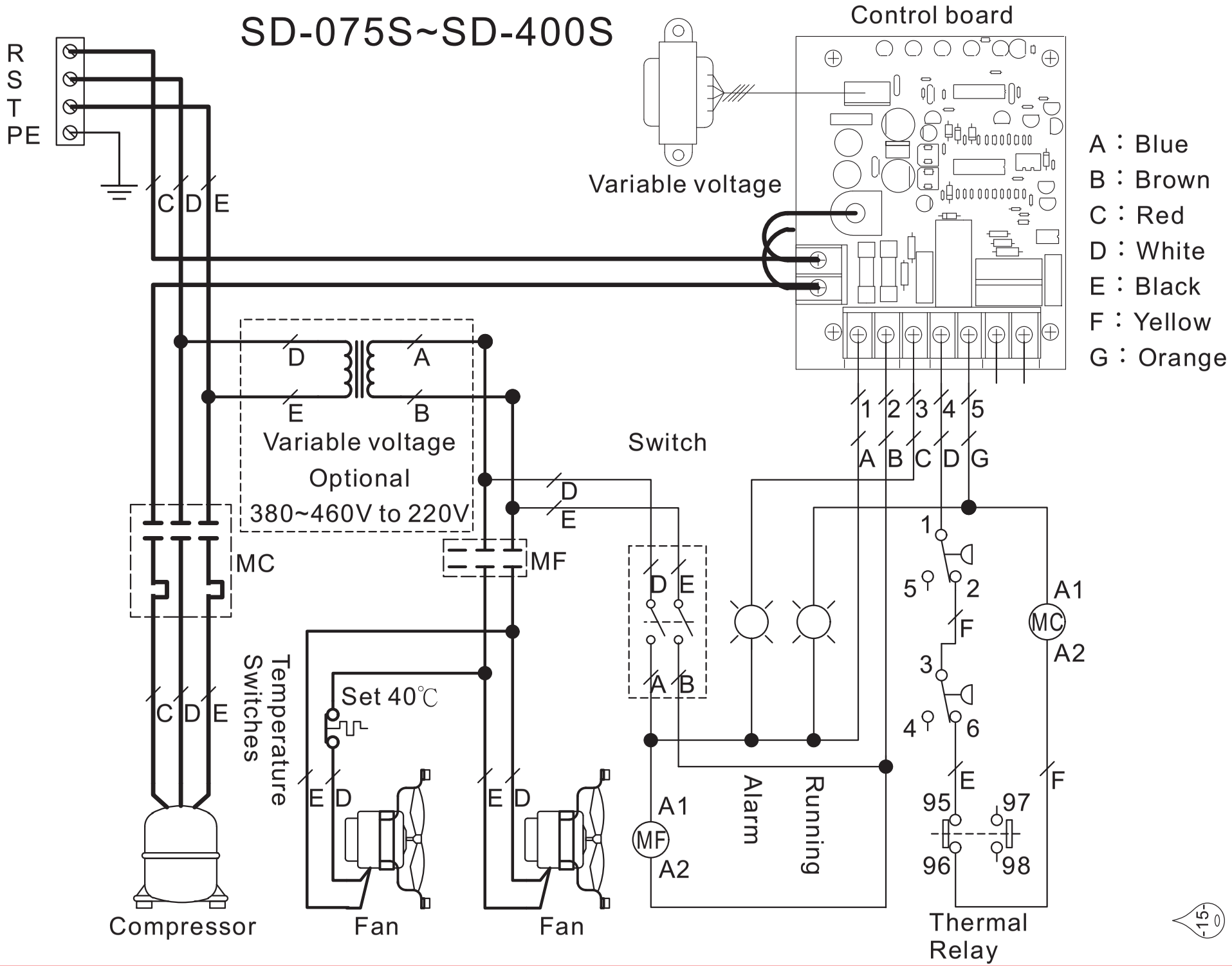

Footnote

Footnote

Footnote